THOMPSON TECHNIQUES:

Brau Anterior Lumbar Access

Thompson Retractor

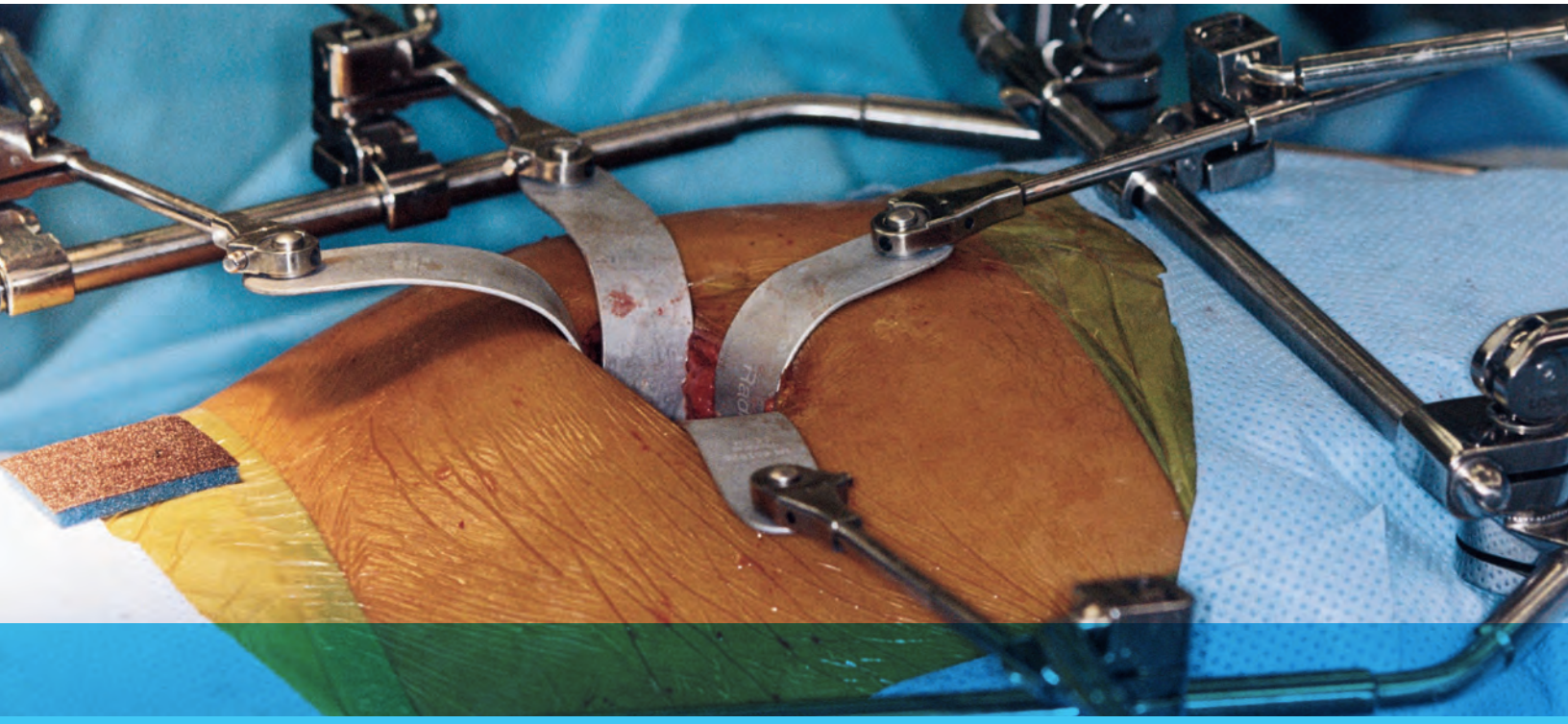

• ANTERIOR LUMBAR ACCESS

Salvador A. Brau, MD, FACS

Uncompromised Exposure.

SALVADOR A. BRAU, MD, FACS

Dr. Brau trained in general vascular surgery at the Mount Sinai Hospital in New York City and has been performing anterior access procedures to all levels of the spine for over 20 years. He has performed over 1,500 open anterior approaches to the lumbar spine and has also been a pioneer in anterior laparoscopic and thoracoscopic access. Dr. Brau was Assistant Clinical Professor of Surgery at USC and now works at the LASSI–Los Angeles Spine Surgery Institute at St. Vincent Hospital and at The Spine Institute at Saint John's Hospital.

Dr. Brau has developed a new "mini-open" anterior approach to the lumbar spine. In October of 2000, he presented his experience with this approach in 386 cases, along with a video of the procedure, to the North American Spine Society Annual Meeting in New Orleans. This procedure is dependent on special retractors designed by Dr. Brau. These retractors received a patent on October 9, 2001 and are available commercially from Thompson Surgical Instruments, Inc.

Introduction

The anterior approach to the lumbar spine is heavily dependent on the ability of the access surgeon to provide exposure quickly and safely in view of a reported incidence of vascular injury. The requirement of a "straight on" anterior-posterior exposure for alignment of cages and artificial discs has presented a significant challenge for the approach surgeon to provide a small incision and yet maintain the degree of safety necessary to prevent injury to the iliac vessels and autonomic nerve plexus. The approach described here utilizing the Thompson retractor system significantly reduces these concerns.

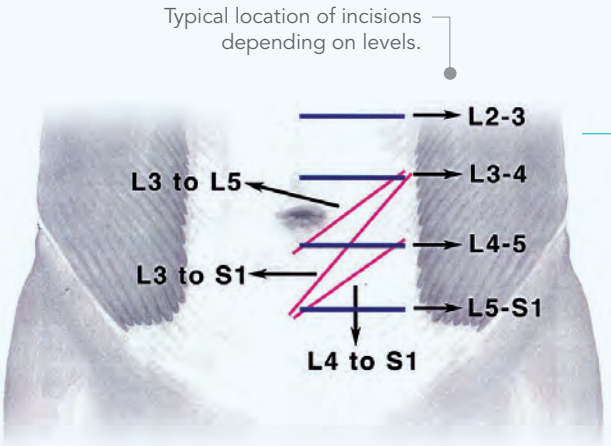

POSITIONING OF PATIENT

Place the patient in the supine position on an x-ray table.

INCISION

The approach surgeon stands on the left and the assistant on the right. The level of the transverse incision in the craniocaudad plane depends on the level of the spine to be approached. A lateral x-ray of the spine is essential to determine the proper placement of this incision.

Description of the Mini-Approach

The left rectus muscle is mobilized circumferentially. With the rectus muscle initially retracted medially, carefully incise the posterior sheath of transversalis fascia 4 to 5 cm until the peritoneum is seen to shine through. Grasp the edges with a hemostat and lift it away and very carefully dissect if from the peritoneum. Incise it as far inferiorly and superiorly as possible. Using your index finger, carefully push the peritoneum posteriorly at the edge of the fascial incision and slowly develop a plane between it and the undersurface of the internal oblique and transversus muscles and fascia. This will lead you to the retroperitoneal space.

Continue careful blunt finger dissection posteriorly, and then start pushing medially trying to elevate the peritoneum away from the psoas muscle. Be careful not to enter the retropsoas space at this point, as this will lead to unnecessary bleeding in a blind pouch. The genitofemoral nerve can be easily identified over the psoas. The ureter can usually be identified as the peritoneum is lifted away from the psoas. Both of these structures should be preserved from injury.

Once the psoas is identified, palpate medially to feel for the disc and vertebral body and iliac artery. At this point, if size of the incision allows, insert the entire hand and make a fist in the retroperitoneal area. Sweep with the closed fist up and down to elevate the peritoneum away in all directions. Continue with blunt dissection to expose the entire length of the common and external iliac arteries as far distally as possible, and then start careful blunt dissection along the lateral edge of the artery. This will expose the left common iliac vein just underneath the artery. Continue the dissection posteriorly to identify the ileolumbar vein(s). Variations in the formation of the common iliac vein and the lumbar veins are common, and great care must be exercised in order to identify, ligate and transect these veins and avoid avulsion. The left iliac vein and artery can now be separated away from the spine using gentle, peanut sponge, fingertip and blunt elevator dissection.

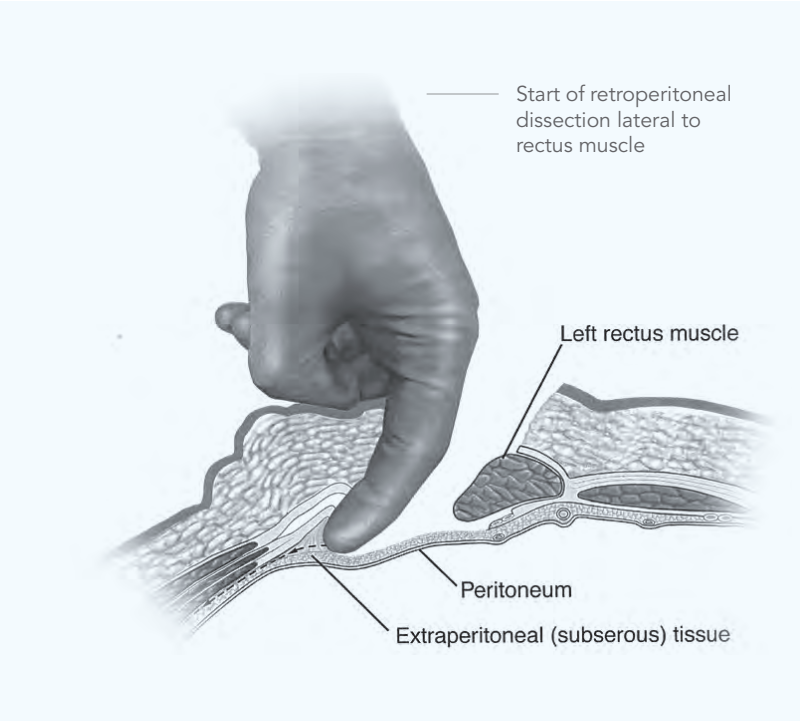

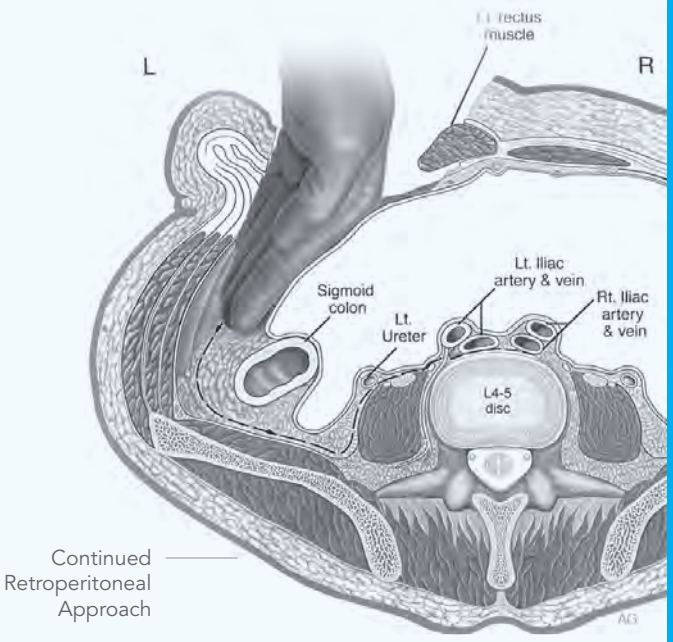

Positioning of the Thompson Retractor

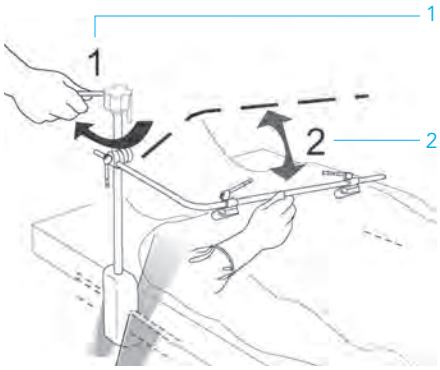

1 Secure the rail clamp to the table rail over the sterile drape on either side of the table.

2 Insert Crossbar into joint and position 2cm above site.

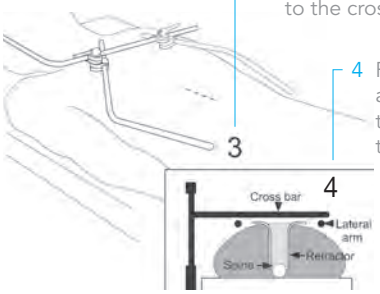

3 Secure 2 lateral extension arms to the crossbar.

4 Position the arms just above the horizon of the patient.

Secure the Elite II Rail Clamp to the table rail over the sterile drape on either side of the table, whichever side keeps the surgeon's operating field clear. The Crossbar is inserted into the joint and positioned 2 cm above the operative site.

All vascular structures are then swept from the left to right, providing adequate visualization of the disc(s) and vertebral bodies involved. Segmental vessels running across the valleys on the anterior surface of the bodies can be transected between clips and swept to the sides with blunt dissection. Make sure you can get at least one finger between the vein and the ligament so that you can palpate the right lateral edge of the spine with the vessels above your finger(s).

The lateral extension arms are attached to the Crossbar and positioned just above the horizon of the of the patient. The surgeon's left hand then re-enters the retroperitoneal space with the rectus now moved laterally, and the fingers find their way to the right side of the spine. A Radiolucent Reverse Lip Anterior Spine Access blade is placed blindly on the right side of the spine using the finger(s) as a guide. This blade is then attached to the lateral extension arms of the retractor frame, elevating the vascular structures and exposing the anterior surface of the spine.

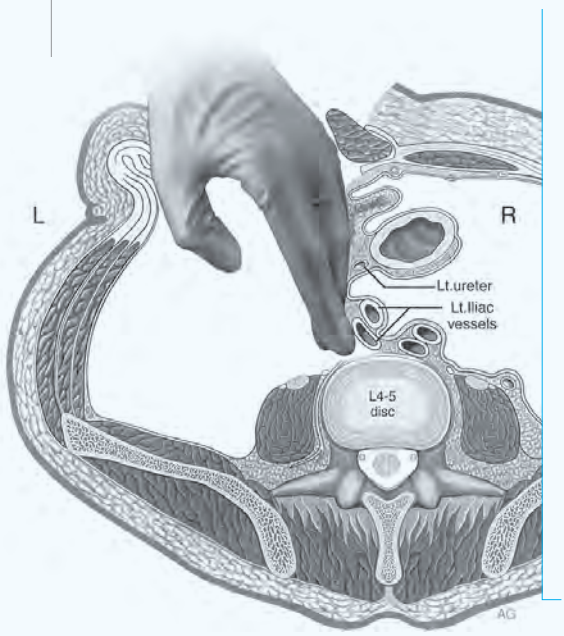

Finger dissection under vessels following ligation of ileo lumbar vein

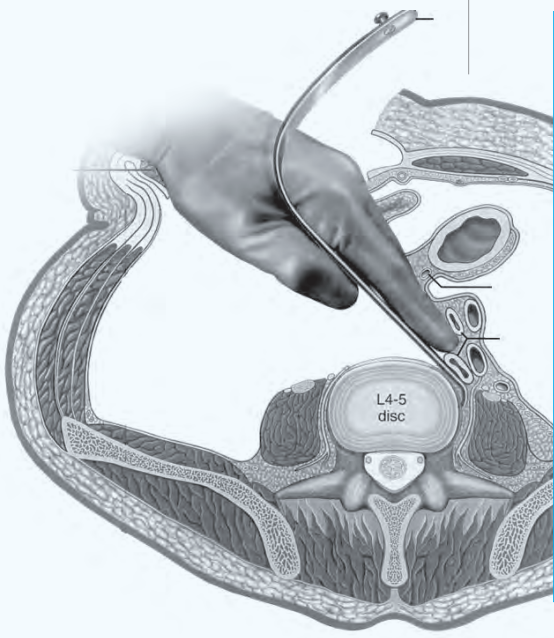

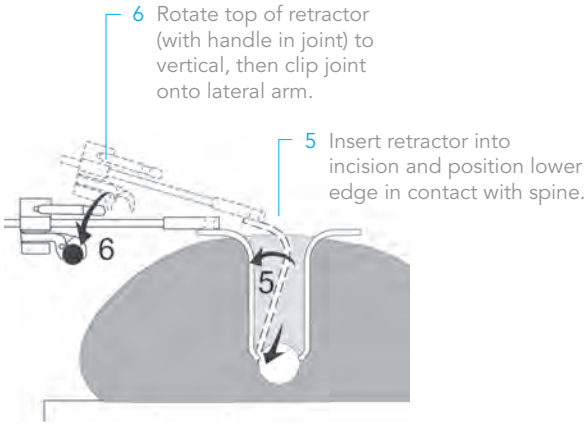

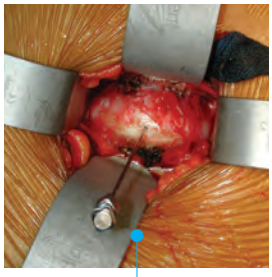

AP view with two Reverse Lip Blades deployed

Once secured to the Thompson Retractor, the reverse-lipped blade will not move. The reverse lip keeps the blade anchored to the edge of the spine and prevents it from slipping anteriorly once tension is applied. Without this reverse lip, the retractor blade will not work effectively.

With the rectus now retracted laterally, there will be much less resistance when pushing the retractor blade to expose the spine in a direct AP view and allow placement of the sleeves for insertion of a threaded device, femoral ring or artificial disk. Place a second reverse-lip blade on the left side of the spine and attach to the Thompson frame. Commonly, additional retractor blades need to be placed superiorly and/or inferiorly to complete the exposure. With the blades well anchored to the lateral wall of the vertebral column, the spine surgeon and the assistant can now work on the disc without other hands or retractors being in the way and with relative security that vessels will not move around the retractors and expose themselves to injury.

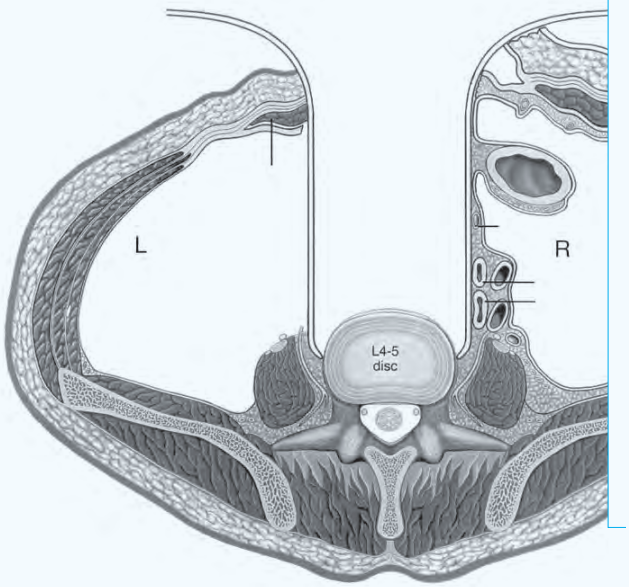

Initial Reverse Lip Blade insertion to right side of spine

Both Reverse Lip blades deployed and engaged at lateral aspect of disc and vertebral body

Radiolucent Brau (Reverse Lip) Anterior Lumbar Blade Kit

The Radiolucent Brau Anterior Lumbar Blade Kit provides excellent exposure of the anterior lumbar spine, especially for ALIF or artificial disc procedures. The reverse lip on the retractor blades enable them to engage the vertebral body while protecting vascular structures. These unique radiolucent, titanium blades were designed by Salvador Brau, M.D., F.A.C.S. exclusively for Thompson Surgical Instruments.

"The requirement of a 'straight on' anterior-posterior exposure for alignment of cages and artificial discs has presented a significant challenge for the approach surgeon to provide a small incision and yet maintain the degree of safety necessary to prevent injury to the iliac vessels and autonomic nerve plexus. The approach described here utilizing the Thompson Retractor system significantly reduces these concerns."

–SALVADOR BRAU, M.D. F.A.C.S.

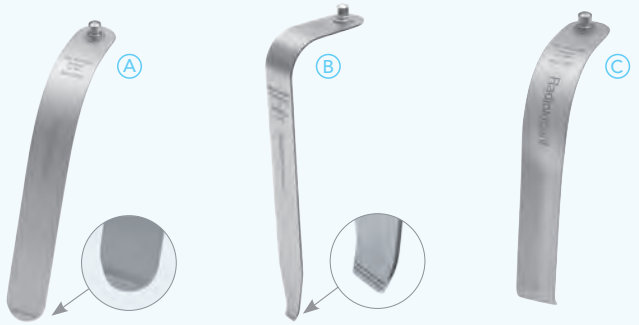

Malleable Reverse Lip *(rigid also available)*

Tapered Reverse Lip *(ideal for osteophytes)*

Malleable Renal Vein *(rigid also available)*

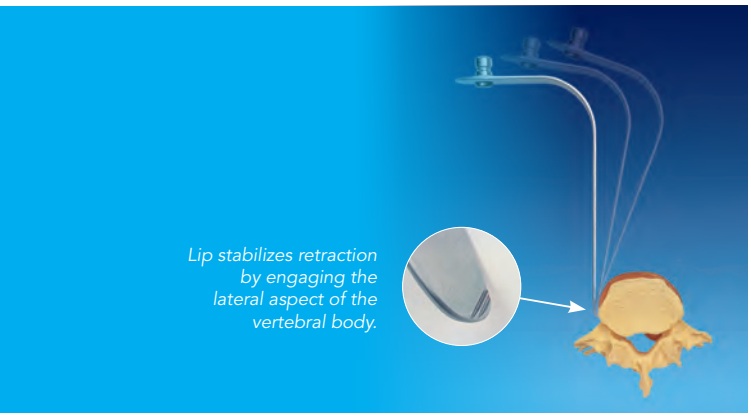

Initial Reverse Lip ASA Blade insertion into right side of spine.

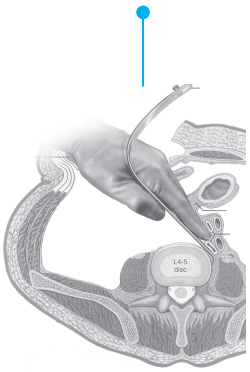

Both Reverse Lip ASA Blades deployed and engaged at lateral aspect of disc and vertebral body.

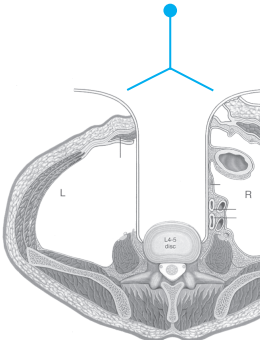

BRAU ANTERIOR LUMBAR BLADE KITS

QTY	ITEM DESCRIPTION	S-LOCK PART #*	INTERCH. PART #
	Brau Anterior Lumbar Blade Kit	**SL91046****	**91046N**
A 2	Reverse Lip ASA Malleable 25mm x 200mm	SL46192ET	46192ET
2	Reverse Lip ASA Malleable 32mm x 200mm	SL46193ET	46193ET
2	Reverse Lip ASA Rigid 25mm x 100mm	SL46194RET	46194RET
2	Reverse Lip ASA Rigid 25mm x 150mm	SL46195RET	46195RET
2	Reverse Lip ASA Rigid 25mm x 200mm	SL46196RET	46196RET
2	Reverse Lip ASA Rigid 32mm x 100mm	SL46197RET	46197RET
2	Reverse Lip ASA Rigid 32mm x 150mm	SL46198RET	46198RET
2	Reverse Lip ASA Rigid 32mm x 200mm	SL46199RET	46199RET
2	Reverse Lip ASA Rigid 25mm x 255mm	SL46200RET	46200RET
2	Reverse Lip ASA Rigid 32mm x 255mm	SL46201RET	46201RET
B 2	Reverse Lip ASA Tapered 25mm x 150mm	SL46195TET	46195TET
2	Reverse Lip ASA Tapered 25mm x 200mm	SL46196TET	46196TET
C 2	Radiolucent Malleable Renal Vein 25mm x 140mm	SL46119BET	46119BET
2	Radiolucent Malleable Renal Vein 25mm x 190mm	SL46119CET	46119CET
2	Radiolucent Rigid Renal Vein 25mm x 140mm	SL46119RET	46119RET
2	Radiolucent Rigid Renal Vein 25mm x 190mm	SL46120RET	46120RET
2	Radiolucent Rigid Renal Vein 25mm x 255mm	SL46121RET	46121RET
D 1	Instrument Case	50000RLT	50000RLT
E 1	Suction for Anterior Lumbar Surgery (SALS)	51234	51234
F 1	AL Depth Gauge	51236	51236

*S-Lock blades are denoted with an 'SL' before the part number. S-Lock blades are compatible with S-Lock handles ONLY (also denoted with an 'SL' before the part #). See page 18 for S-Lock handles.

**S-Lock blade kits must only be used with the S-Lock Spine Frame, see page 16.

Adapter Handles and Accessories

ADAPTER HANDLES

Our competitive adapter handles enable you to adapt any Thompson interchangeable blade to a Bookwalter, Omni and Synthes retractor.

BOOKWALTER ADAPTER HANDLES

Adapts any Thompson Interchangeable Blade to the Bookwalter Retractor.

S-Lock Angling	SL45005AL
Angling	45005AL
Non-Angling	45005L

OMNI ADAPTER HANDLES

Adapts any Thompson Interchangeable Blade to the Omni Retractor.

S-Lock Angling	SL45004AL
Angling	45004AL
Non-Angling	45004L

SYNTHES ADAPTER HANDLES

Adapts any Thompson Interchangeable Blade to your Synthes SynFrame or ProAccess Retractor System.

S-Lock Angling	SL45014AL
Angling	45014AL
Non-Angling	45014L

REPLACE YOUR HEADLIGHT WITH THE LITE WAND XE OR RETRACTOR LITE XE

The Lite Wand Xe and Retractor Lite Xe increase exposure by adding illumination and eliminating headlamps and shadows. Low-profile, the Lite Wand Xe and Retractor Lite easily clip on and direct cool, bright light into the incision. Additionally, the bendable gooseneck allows the light to reach the deepest, hard to see cavities improving illumination where it is needed most.

Retractor Lite Xe easily clips on to any Thompson Retractor blade

RETRACTOR LITE XE KITS

Retractor Lite Xe with ACMI Cable	40001RX
Retractor Lite Xe with Storz Cable	40002RX
Retractor Lite Xe with Wolf Cable	40004RX
Retractor Lite Xe with Olympus Cable	40019RX

LITE WAND XE KITS

Lite Wand Xe with ACMI Cable	40001X
Lite Wand Xe with Storz Cable	40002X
Lite Wand Xe with Wolf Cable	40004X
Lite Wand Xe with Olympus Cable	40019X

Lite Wand Xe

ACCESSORIES

Lite Clip *(included in Retractor Lite Xe and Lite Wand Xe Kits)*	40026

Instrument Case included in kits and clip

Lite Clip

STANDARDIZE YOUR BED RAIL WITH THE TABLE ADAPTER

The Jackson Frame Adapter easily connects to Jackson Spine tables to add a standard bed rail for applying a table mounted retractor system to your operation.

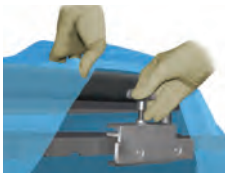

TABLE ADAPTER

Jackson Spine Frame Adapter	41927

EXTEND YOUR RAIL

Apply a Rail Extender to your OR table to increase your rail length or width and provide more attachment options for the rail clamps.

RAIL EXTENDER

Rail Extender 15" (2 required for CCA use)	5844
Rail Extender 14" long with 2 1/4" offset (helpful for obese patients)	41917
Rail Extender 22"	41929

Rev A
041112
jcttbrau0412

Thompson
SURGICAL INSTRUMENTS

10170 East Cherry Bend Road
Traverse City, Michigan 49684
phone: 231.922.0177
fax: 231.922.0174

thompsonsurgical.com

Made in the USA

For a FREE TRIAL
call 1.800.227.7543

Free trial valid for U.S. customers only.
International customers please call for more information.

© 2012 Thompson Surgical Instruments, Inc. Traverse City, Michigan. Printed in U.S.A.
™ S-Lock® is a trademark of Thompson Surgical Instruments, Inc.
Patents: US5902233, US5897087, US6017008, US5984865, US7338442, US7749163
Other patents pending.

CE 0470